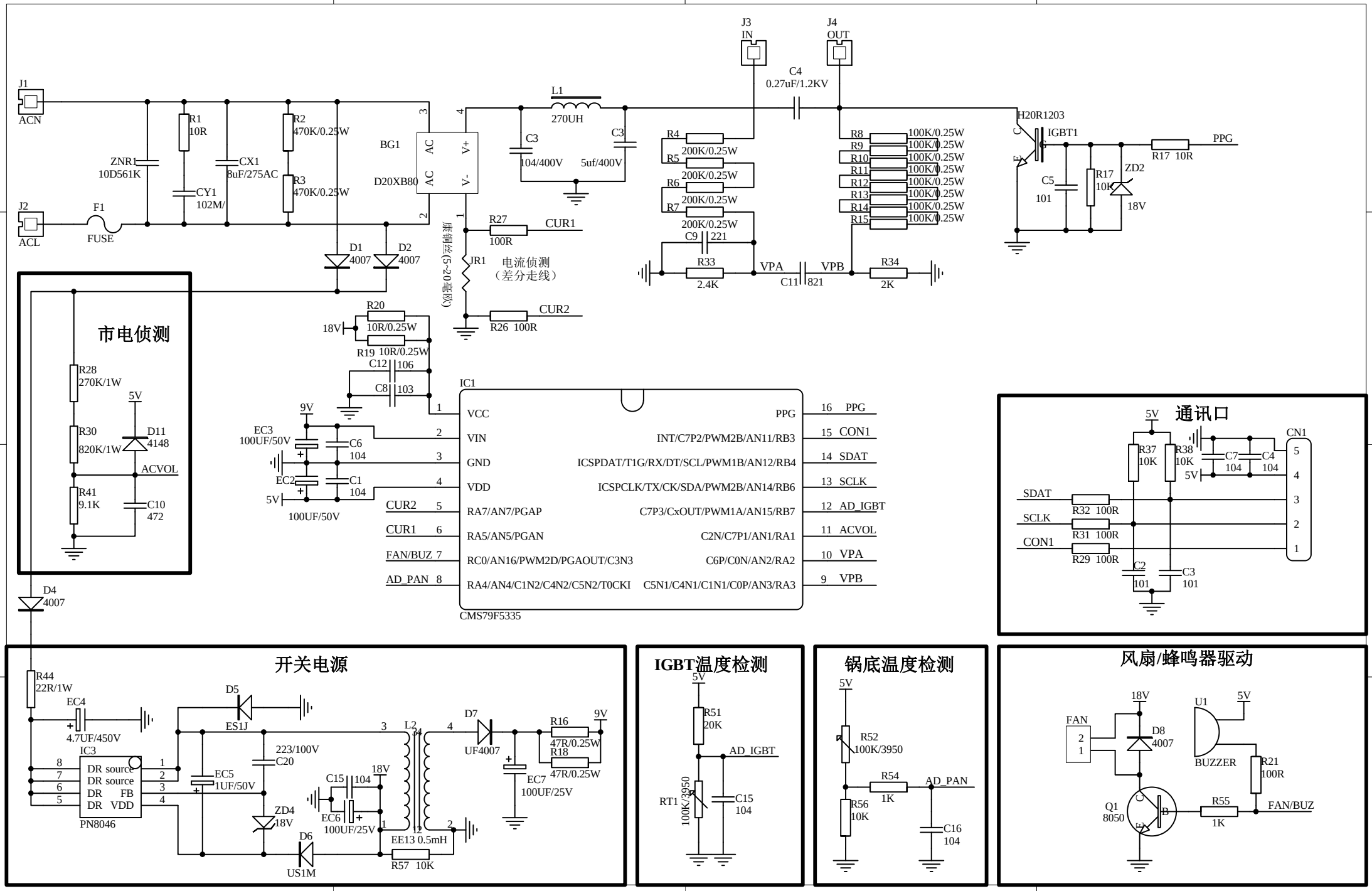
J1
ACN
J2
ACL
F1
FUSE
ZNR1
10D561K
R1
10R
CY1
102M/
CX1
8uF/275AC
R2
470K/0.25W
R3
470K/0.25W
BG1
D20XB80
AC
AC
V+
V-
D1
4007
D2
4007
L1
270UH
C3
104/400V
C3
5uf/400V
J3
IN
J4
OUT
C4
0.27uF/1.2KV
R4
200K/0.25W
R5
200K/0.25W
R6
200K/0.25W
R7
200K/0.25W
C9
221
R33
2.4K
VPA
C11
821
VPB
R34
2K
R8
R9
R10
R11
R12
R13
R14
R15
100K/0.25W
H20R1203
IGBT1
C5
101
R17
10K
ZD2
18V
R17 10R
PPG
R27
100R
CUR1
JR1
电流侦测
（差分走线）
R26 100R
CUR2
R20
10R/0.25W
18V
R19 10R/0.25W
C12
106
C8
103
市电侦测
R28
270K/1W
5V
R30
820K/1W
D11
4148
ACVOL
R41
9.1K
C10
472
D4
4007
9V
EC3
100UF/50V
C6
104
EC2
C1
104
5V
100UF/50V
IC1
VCC
VIN
GND
VDD
CUR2
CUR1
FAN/BUZ
AD_PAN
RA7/AN7/PGAP
RA5/AN5/PGAN
RC0/AN16/PWM2D/PGAOUT/C3N3
RA4/AN4/C1N2/C4N2/C5N2/T0CKI
PPG
INT/C7P2/PWM2B/AN11/RB3
ICSPDAT/T1G/RX/DT/SCL/PWM1B/AN12/RB4
ICSPCLK/TX/CK/SDA/PWM2B/AN14/RB6
C7P3/CxOUT/PWM1A/AN15/RB7
C2N/C7P1/AN1/RA1
C6P/C0N/AN2/RA2
C5N1/C4N1/C1N1/C0P/AN3/RA3
CON1
SDAT
SCLK
AD_IGBT
ACVOL
VPA
VPB
CMS79F5335
通讯口
5V
R37
10K
R38
10K
C7
104
C4
104
CN1
SDAT
R32 100R
SCLK
R31 100R
CON1
R29 100R
C2
101
C3
101
开关电源
R44
22R/1W
EC4
4.7UF/450V
D5
ES1J
IC3
DR source
DR source
DR FB
DR VDD
PN8046
EC5
1UF/50V
223/100V
C20
ZD4
18V
C15
104
18V
EC6
100UF/25V
L2
EE13 0.5mH
D6
US1M
R57 10K
D7
UF4007
R16
47R/0.25W
R18
47R/0.25W
9V
EC7
100UF/25V
IGBT温度检测
5V
R51
20K
AD_IGBT
RT1
100K/3950
C15
104
锅底温度检测
5V
R52
100K/3950
R54
1K
AD_PAN
R56
10K
C16
104
风扇/蜂鸣器驱动
18V
FAN
D8
4007
U1
5V
BUZZER
R21
100R
Q1
8050
R55
1K
FAN/BUZ